BEST WEIGHT TO POWER RATIO IN THE WORLD







CPSERIES CP200D

Constant Potential Portable X-Ray Generators



TELEDYNE ICM
Everywhereyoulook™
Part of the Teledyne Imaging Group

Your inspection becomes a walk in the park

LIGHT-WEIGHT

100% DUTY CYCLE

CONSTANT POTENTIAL

MULTIPLE-OUTPUTS CARROUSEL

RUGGEDIZED

WIDE INPUT POWER RANGE

FEATURES

	Unit	SITEX CP200D
BEAM	-	Directional
POWER SUPPLY	-	Mains
Output voltage range	kV	10 to 200
Tube current range	mA	1 to 10
Tube current at full output	mA	4.0
Maximum power at the anode	W	900
Constant power mode	-	Yes
Working cycle at 30°C (*)	%	100
Steel penetration	mm/in	42 / 1.65 *
Weight (exluding hand rings)	Kg/lbs	12 / 26.5
Overall dimensions	mm/in	Ø 140 x 725 / 5.5 x 28.5
Leakage dose at 1 m at full output	mSv/h	< 2.0
Optical focal spot according to EN 12543	mm/in	3.0 / 0.12
Maximum useful angle	°	60 x 40 elliptical
Inherent filtration	mm/in	0.8 / 0.03 (Be window)
Waterproof level	-	IP65
Operating temperature	°C/F°	-30 to +60 / -22 to +140
Storage temperature	°C/F°	-40 to +70 / -40 to +158

(*) 700 mm FFD, 10 min , AA400, D=2 for CPD

POWERBOX

	Unit	POWERBOX
Adjustable pre-warming time	sec	3 to 99
Pilote ligt indicator	-	3
Independant START and STOP	-	Yes
Two position safety key rotary switch	-	X-ray ON / STANDBY
Preheating is function of selected kVs (kV max by default)	-	Automatic
Exposure time calculator	-	Optional
Programmable safety interlocks	-	3
Clear indication of the precise carrousel system position	-	Yes
Type of power supply	-	Mains, Power generator, Battery (option)
Supply voltage range	VAC	From 90 to 264
Supply frequency range	Hz	From 45 to 66
Input power factor when at full output	%	99
Input current at full power, 230 VAC	A	6.0
Storage ambient temperature range	°C/F°	-40 to +70 / -40 to 158
Working ambient temperature range	°C/F°	-30 to +55 / -22 to 131
Protection Class	-	IP65
Weight	Kg/lbs	7.9 / 17.4

DRAWINGS

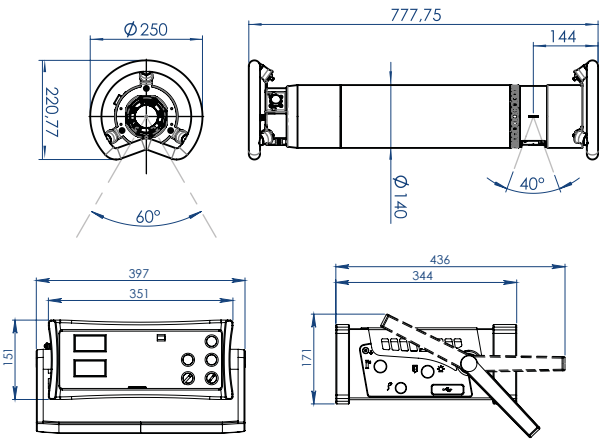

ACCESSORIES

Quadripod	Transport case
Holding bars	Flashing light
Tripod	Diaphragms
Pipe slider	Reinforced canle
Alucase	Tripod flashing light
Battery converter	

All specifications are non contractual and subject to change without prior notice.

TELEDYNE ICM
Zoning Les Plenesses / Rue Du Progrès 3 / B-4821 Andrimont (Dison) - Belgium
+32 (0)87 44 01 50 / icm.sales@teledyne.com

TELEDYNE ICM
Everywhereyoulook™
Part of the Teledyne Imaging Group