COMPACTNESS AT ITS BEST





CPBATTERY CP120B

Battery Operated Portable X-Ray Generator



TELEDYNE ICM
Everywhereyoulook™
Part of the Teledyne Imaging Group

CPBATTERY

All the power you need and more

LIGHT-WEIGHT

BATTERY OPERATED

SMALL FOCAL SPOT

DR-READY

UP TO 120 KV

ROTATING TANK

FEATURES

	Unit	CP120B
BEAM	-	Directional
POWER SUPPLY	-	Battery
Output voltage range	kV	40 to 120
Tube current range	mA	0.1 to 1.0
Tube current at full output	mA	1.0
Maximum power at the anode	W	120
Constant power mode	-	Yes
Working cycle at 30°C (*)	%	/
Steel penetration	mm/in	10 / 0.4 **
Weight (exluding hand rings)	Kg/lbs	7.0 / 15.4
Overall dimensions	mm/in	Ø 124 x 440 / 4.9 x 17.3
Leakage dose at 1 m at full output	mSv/h	< 2.0
Optical focal spot according to EN 12543	mm/in	0.8 x 0.5 / 0.03 x 0.02
Maximum useful angle	°	50 x 50
Inherent filtration	mm/in	Equiv. 3.5 / 0.1 (Al)
Waterproof level	-	IP54
Operating temperature	°C/F°	-25 to +50 / -13 to +140
Storage temperature	°C/F°	-40 to +80 / -40 to +176
Guard rings	-	Optional

(**) 400 mm FFD, 1min, AA400, D=2 for CPB

ACCESSORIES



RUGGEDIZED STRUCTURE



ADJUSTABLE COLLIMATOR



CARBON TRIPOD



FAST BATTERY CHARGER



TRIGGER



EXTERNAL POWER SUPPLY

DRAWINGS

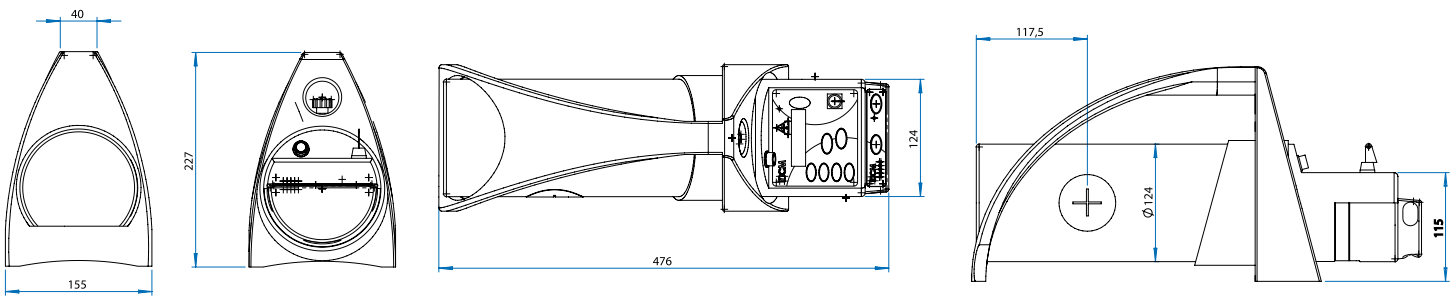

All specifications are non contractual and subject to change without prior notice.

TELEDYNE ICM

Zoning Les Plenesses / Rue Du Progrès 3 / B-4821 Andrimont (Dison) - Belgium

+32 (0)87 44 01 50 / icm.sales@teledyne.com

TELEDYNE ICM
Everywhereyoulook™
Part of the Teledyne Imaging Group